$~32

* **IN THE HIGH COURT OF DELHI AT NEW DELHI**

Date of Decision: 31st March, 2022

\+ **C.A. (COMM.IPD-PAT) 4/2022**

AGRIBOARD INTERNATIONAL LLC ..... Plaintiff

Through: Mr. Vineet Rohilla, Mr. Rohit Rangi and Mr. Debashish Banerjee, Advocates. (M:9810540598)

versus

DEPUTY CONTROLLER OF PATENTS AND DESIGNS ..... Defendant

Through: Mr. Harish V. Shankar, CGSC, Ms. S. Bushara Kazim, Srish Kumar Mishra, Advocates.

CORAM:
JUSTICE PRATHIBA M. SINGH

Prathiba M. Singh, J.(Oral)

1. This hearing has been done through hybrid mode.

I.A. 161/2022 (for delay)

2. The present application has been filed by the Appellant seeking condonation of delay of 100 days in filing the present appeal. In view of the reasons stated in the application, and the order dated 23rd September, 2021 passed by the Supreme Court in ***Suo Moto Writ Petition (C) No. 3 of 2020*** titled ***In Re: Cognizance for Extension of Limitation***, the said delay is condoned.

3. ***I.A.161/2022*** is disposed of.

C.A.(COMM.IPD-PAT) 4/2022

4. The present appeal under section 117A (2) of the Patents Act, 1970

(hereinafter "Act") challenges the impugned order passed by the Deputy Controller of Patents & Designs dated 16th June, 2021. By the impugned order, the Appellant's patent application bearing no. 202014010848 for the invention *'Efficient Method and Apparatus for Producing Compressed Structural Fiberboard' (hereinafter 'subject invention')* has been refused on the ground of lack of inventive step under Section 2(1)(ja) of the Act.

5. The background of the case is that the Appellant-Agriboard International LLC, a company based in the United States, filed a patent application on 14th March, 2019 in the US being priority application bearing No.16/353,624. The corresponding Indian application was filed on 13th March, 2020 before the Indian Patent Office (*"IPO"*) claiming priority from the US patent application (*hereinafter 'priority application'*). Upon filing of the request for examination, the application of the Appellant was examined by the IPO.

6. In the First Examination Report *(hereinafter 'FER')* dated 21st July, 2020 objections relating to novelty under Section 2(1)(j) of the Act on the ground of the subject invention being anticipated, and lack of inventive step under Section 2(1)(ja) of the Act for the invention being obvious were taken. Claims 1-15 of the patent application were found to be obvious in view of the teaching of the following three documents in the FER:

"Document **D1**: **US5945132A**

Document **D2**: **US20090188642A1**

Document **D3**: **CN102026785B**"

7. The response to the FER was filed by the Appellant on 21st February, 2021. After holding a hearing and filing of written submissions, vide the

impugned order, the application for grant of patent for the subject invention was rejected. The impugned order is a short order and the same is extracted below:

> "*Decision*
>
> *Agriboard International, LLC of U.S.A filed the instant application for the grant of patent on 13/03/2020. The application was examined on request made by applicant's agent and first examination report was issued on 21/07//2020. Applicant's agent filed reply to first examination report on 21/02/2021 but following objections were still outstanding:*
>
> *1. D1: US5945132A D1 (abstract) discloses an efficient method for making a compressed structural fiberboard from agricultural fibrous matter, comprising the steps of: providing a preselected volume of the agricultural fibrous matter; (column 4 lines 15-20)preconditioning the agricultural fibrous matter to have first predetermined moisture level within the agricultural fibrous matter; (column 4 lines 44-54)**extruding the agricultural fibrous matter to form a continuous compressed structural fiberboard using an extruder having a cyclic ram that is actuated and driven by electric linear actuators; {(column 5 lines 20-31), Extruder effect produce by the reciprocating ram of packer disclosed in D1 is significantly similar to the effect of extruder having a cyclic ram of instant invention, thus having no inventive ingenuity.} monitoring the density of the compressed structural fiberboard;** (column 5 lines 63-65)utilizing a programmable logic controller to monitor and adjust the speed at which the compressed structural board is produced to control the density of the compressed*

> *structural fiberboard. (column 11, lines 38 to 49). In view of the above, it would be obvious to a person skilled in the art to arrive at the technical solution set forth in instant invention by documents D1, and the conventional technical means in the art. Therefore, the subject matter of claims lack an inventive step and thus objected u/s 2(1)(j) of Patent Act, 1970.*
> *2. PA should be notarized.*
>
> *Applicant`s agent appeared for hearing & filed written submission on 30/04/2021.*
>
> *Having considered all the facts and submissions made by the agent for the applicant during the hearing as well as all the documents on record* ***I hereby conclude that alleged invention is lacking in inventive step(see Para 1)). Therefore I hereby refuse this application u/s 2(1)(ja)of the Act.***
>
> *Dated this 16th June, 2021*"

8. The submission of Mr. Vineet Rohilla, ld. Counsel appearing for the Appellant, is that the impugned order is absolutely cryptic and it does not have any reasons whatsoever for the refusal of the grant of patent. Even though one paragraph of prior art D1: US5945132A *(hereinafter "D1")* is cited in the impugned order, there is no analysis as to the differences or similarity between the cited prior art- D1 and the subject invention of the Appellant, which was clearly distinguished by the Appellant in its reply to the FER. He relies upon the judgment of the Supreme Court in ***Assistant Commissioner. Commercial Tax Department v. Shukla and Brothers, (2010) 4 SCC 785*** to argue that giving reasons in an order is an essential element of the principle of *audi alteram partem*.

9. Insofar as the technical aspect as to whether the subject invention is lacking inventive step is concerned, ld. Counsel seeks to distinguish the prior art D1 from the subject invention by pointing out ***figure 9*** of the subject invention read with paragraph 45 of the specification of the subject invention. According to the ld. Counsel, the machinery is an invention titled *'Efficient Method and Apparatus for Producing Compressed Structural Fiberboard'*. He submits that the subject invention has various steps as is evident from ***figure 1*** of the Appellant's application which comprises of various cells and elements. The core of the invention lies in the extruder wherein by means of an electric mechanism, improvement has been made over the prior art D1 which was operated with a drive flywheel and a crankshaft. He seeks to substantiate the same by reading paragraph 45 of the specification and submitting that in the cited prior art D1, the movement of the extruder was in a mechanical manner, however, in the subject invention the same is done vide electrically driven extruder.

10. He further submits that the priority patent application in the US has also proceeded for registration and the said very prior art, D1 cited by the IPO, was considered by the US Patent Office.

11. On the other hand, Mr. Harish V. Shankar, ld. CGSC appearing for the IPO submits that the reasoning given by the Controller is based upon the paragraph which is extracted in the impugned order. The change from the prior art D1 from mechanical equipment extruder to an electric one is nothing but a workshop modification. He also submits that the earlier patent D1, which was also filed by the Appellant- Agriboard Industries Inc., was granted in 1999 and was due to expire in 2019, which is when the application for subject invention has been filed by the Appellant. This is

nothing but a means of extending the term of the earlier patent itself.

12. He further submits that electric liner actuators are used extensively for actuating a ram in pressing apparatus during this 20 years period and he relies upon US20100307349A1 to substantiate his argument. He, thus, submits the subject invention has been rightly rejected by the IPO. He also emphasis the fact that even in the International Search Report (*hereinafter 'ISR'*) issued by the Patent Cooperation Treaty Office, the subject claims were found to lack inventive step in terms of Article 33(3) of the Patent Cooperation Treaty, 1970.

13. Heard ld. Counsels for both the parties. The Court has perused the impugned order as also the subject invention and the prior art D1. In the impugned order, the IPO has quoted a paragraph from the FER and has rejected the application on the conclusion that the invention does not disclose inventive step under Section 2(1)(ja) of the Act.

14. In the subject patent application, a perusal of ***figure 1*** shows that the following elements exist in the present equipment which is sought to be patented:

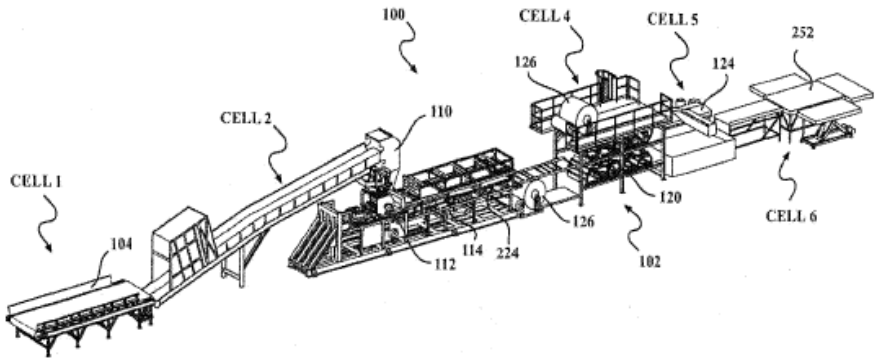

FIG. 1

15. Insofar as the specific extruder itself is concerned, where the novelty and inventive is stated to reside, the same is clearly explained in ***figure 9*** read along with the explanation in paragraph 45 of the Specification. ***Figure 9*** of the Appellant's application is as under:

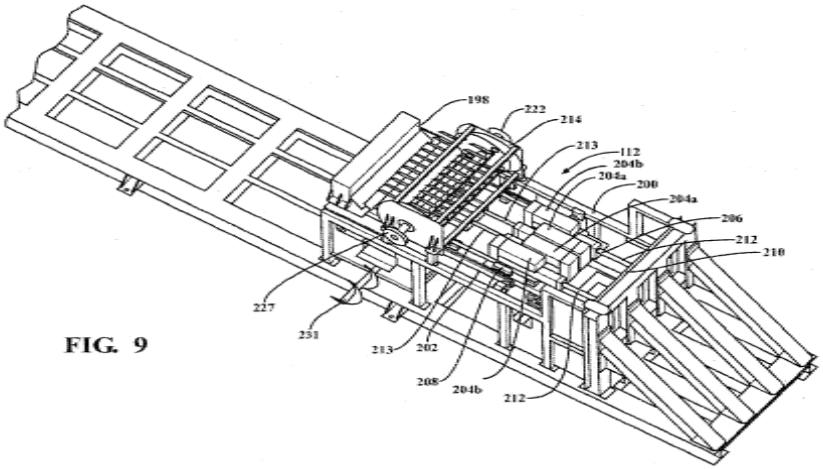

FIG. 9

16. ***Figure 1*** extracted above, is the left perspective view of a method of an apparatus for manufacturing a compressed structural fiberboard. It explains the process in which the rice straw is fed into the apparatus. The apparatus is broadly divided into Cell 1, 2, 4, 5, and 6. Cells 1 and 2 are two conveyors. Cell 4 consists of a heat sink track cooler. Cell 5 is a water jet cutting system and Cell 6 consists of an air table. ***Figure 9*** explains the actuators and the manner in which they function. As per the complete specification, the actuators in the subject invention are linear in nature which require less energy, less cost, less maintenance as compared to conventional extruder which uses rotating equipment. The linear actuators are in communication with and controlled by means of the motion control software in the control system so as to make proper adjustment between the stroking

speed, the time of linear actuators and the relative speed of the mill. These features are missing in D1 which may have a similar apparatus but uses a conventional mechanical apparatus.

17. Paragraph 45 of the specifications specifically notices and distinguishes the conventional art by explaining that in a conventional extruder, the rotating equipment is mechanically moved whereas in the subject invention, the same is done much more efficiently by the use an extruder having a cyclic ram that is actuated and driven by electric linear actuators. It is claimed that the same provides greater control of the time and force of the cyclic ram during the compression cycles as compared to other conventional extruders along with requiring lesser energy, maintenance, and reduced safety risks. Paragraph 45 of the specifications reads as under:

> "*[0045] The cyclic ram 196 is supported by the support structure 200, wherein the cyclic ram 196 is slidably supported by a pair of substantially parallel, sliding guide rails 202 connected to the support structure 200. The cyclic ram 196 is reciprocally driven along the guide rails 202 by four electric linear actuators 204a, 204b. The linear actuators 204a, 204b are adjacently mounted on a table or floating plate 206 immediately above the cyclic ram 196 wherein the table 206 is supported by a pair of substantially parallel, sliding guide rails 208 on the cyclic ram 196 such that the table 206 and the linear actuators 204a, 204b can move linearly relative to the cyclic ram 196. The four linear actuators 204a, 204b are positioned in pairs of two wherein the linear actuators 204a are mounted immediately adjacent one another in the centre of the table 206, and the linear actuators 204b are mounted on opposite sides of the linear actuators*

204a. Two of the linear actuators 204b each have a piston rod 212 connected to the back wall 210 of the support structure 200 while the other two linear actuators 204a each have a piston rod 213 connected to the cyclic ram 196. The piston rods 212, 213 move linearly and reciprocally in and out of the respective linear actuators 204a, 204b between a retracted position and an extended position at a speed of 60 strokes per minute with a stroke length of approximately 30"- 32". When the cyclic ram 196 is in the retracted position, all four linear actuators 204a, 204b are in the retracted position, that is, their associated piston rods 216 are fully withdrawn into the linear actuators 204a, 204b. When this occurs, the table 206 supporting the linear actuators 204a, 204b is adjacent the back wall 210 of the support structure 200, and the cyclic ram 196 is positioned in its most rearward position toward the back wall 210 of the support structure 200. When the cycle of the cyclic ram 196 begins, the two linear actuators 204a are simultaneously actuated by power servos (not shown) under the control of motion control software in the control system 256 such that the piston rods 213 extend outward from the linear actuators 204a thereby moving the cyclic ram 196 away from the back wall210 toward the extrusion tunnel198. Shortly thereafter, the two linear actuators 204b are simultaneously actuated by power servos (not 25 shown) also under the control of motion control software in the control system 256 such that the piston rods 212 of the linear actuators 204b move the table 206 toward the extrusion tunnel 198 and away from the back wall 210 of the support structure 200. During this time, both pairs of linear actuators 204a, 204b are actuated concurrently such that their respective piston rods

> *213, 212 move simultaneously to provide maximum pressure on the rice straw 103 in the throat of extrusion tunnel 198. Once the piston rods 212 of the linear actuators 204b become fully extended, the table 206 is stopped from moving toward the extrusion tunnel198, and the piston rods 213 of the linear actuators 204a continue to extend the cyclic ram 196 and into the extrusion tunnel198 and into the extended position thereby completing the compression cycle. The cycle then reverses itself, and the process continually cycles. The use of the linear actuators 204a, 204b to drive the cyclic ram 196 provides greater control of the time and force of the cyclic ram 196 during the compression cycle as compared to other conventional extruders. In addition, the linear actuators 204a, 204b require less energy, less cost, less maintenance, and reduced safety risk than other conventional extruders, especially those using rotating equipment. As previously noted, the linear actuators 204a, 204b are in communication with and controlled by motion control software in the control system 256 such that the stroking speed and timing of the linear actuators 204a, 204b can be adjusted relative to the speed of the mill 102."*

18. Insofar as the prior art D1 is concerned, the said document has also been considered by the US Patent Office, where the examiner has sought to distinguish the same in the following manner:

> *"Disclosure Statement submitted 3/14/2009, Sullivan et al (US 6143220) and Pittman et al (US 8052842).*
>
> *DE 102006004779 A1 discloses a process and apparatus for forming fiberboard products from agricultural fibers. The process comprises providing a preselected volume of agricultural*

fibrous matter, pressing the matter into a plate strand tool and compressing and heating the matter in the plate strand tool using a platen.

Sullivan et al discloses a process and apparatus for forming fiberboard products from agricultural fibers. The process comprises providing a preselected volume of agricultural fibrous matter, preconditioning the matter to a predetermined moisture level, and extruding the matter to form a continuous compressed structural fiberboard. A mechanism for offsetting the pressure fluctuations of the extruder ram is included to maintain the board density at a predetermined value.

Pittman et al discloses an improved process over Sullivan et al for forming fiberboard products from agricultural fibers. The process comprises an additional step of monitoring the density of the compacted fiberboard and adjusting the speed at which the compressed fiberboard is produced via pinch rollers that resist forward movement of the compacted core to control and maintain a predetermined density of the compacted core.

The prior art employs a cyclic ram driven by connecting rod(s) extending from a crank connection connected to a drive flywheel, is in accordance with conventional practice. The prior art fails to provide an extruder having a cyclic ram driven by electric linear actuators as currently claimed. ***There is further no disclosure in the prior art that provides motivation to one of ordinary skill in the art to modify the methods and apparatus disclosed to include electric linear actuators instead of the conventional connecting rod, crank connection and drive flywheel with an expectation of obtaining an advantage. Such modification represents a significant change in***

> ***<u>the operating principle of the ram</u>***. *The currently claimed process is therefore considered to be nonobvious over the prior art.*
>
> *Any comments considered necessary by applicant must be submitted no later than the payment of the issue fee and, to avoid processing delays, should preferably accompany the issue fee. Such submissions should be clearly labeled "Comments on Statement of Reasons for Allowance."'*

19. A perusal of the said analysis would show that the US Patent Office has come to the conclusion that there is a *significant change* in the operating principle of the ram itself.

20. After perusing the documents on record, it is clear that the analysis of lack of inventive step does not take the above aspects into consideration. The order simply extracts the objection from the FER and does not discuss the response given by the Appellant. Thus the impugned order is completely lacking in reasoning. Except simply coming to a conclusion that the invention is lacking in inventive step, there is no discussion whatsoever in the impugned order as to the manner in which the Appellant sought to distinguish D1 from the subject invention. Also, there is no reasoning by the Controller as to why the subject invention would be hit by prior art D1. Moreover, the subject patent specification, in the summary, clearly discloses that *the extruding ram is actuated and driven by linear actuators*; monitoring the density of the compressed structural fiberboard and *utilising a programmable logic controller to monitor and adjust the speed at which the compressed structural board is produced* to control the density of the compressed structural fiberboard. These elements are not contained in the

prior art D1. In fact, in D1, the manner in which the extruding ram is mounted and the manner in which it functions appears to be completely different which is evident from a reading of the following extract:

> *"In accordance with the invention, the ram head is configured to enable easy and quick size adjustments. Thus, it includes a spacer **82** sandwiched between the base module **72** and wear plate **79**. It will be recognized that one can simply change such spacer **82** to vary the height dimension of the head. The location of the base module need not be changed. A different nose piece **74** can be provided having a height correlated to the changed height of the ram head. The ram head also includes end blocks **83** which easily can be changed to vary the width of such head.*
>
> *As mentioned previously, the ram head reciprocates to compress fiber into the forming end of a core. FIGS. 14 and 15 illustrate a support for the ram head. The ram head (not shown in such figures) is mounted rigidly to a plate **86**. This plate **86** is part of a slide **87** mounted for reciprocal motion by means of a connecting rod **88** extending from a crank connection **89** which, in accordance with conventional practice, is connected to a drive flywheel **91** (FIG. 8)."*

21. Mr. Harish V. Shankar, ld. counsel has sought to rely upon the ISR issued by the PCT Office and other prior art which also discloses electric linear actuators. However, none of these have been considered in the impugned order. In the impugned order, the Controller has simply arrived at a conclusion, without any reasoning whatsoever, that the subject invention is lacking inventive step.

22. The Supreme Court in ***Assistant Commissioner v. Shukla and Brothers (supra),*** has categorically held that passing of a reasoned and a speaking order is an integral part of the principle of *audi alteram partem.*

The relevant paragraph reads as under:

> *"9. The increasing institution of cases in all Courts in India and its resultant burden upon the Courts has invited attention of all concerned in the justice administration system. Despite heavy quantum of cases in Courts, in our view, it would neither be permissible nor possible to state as a principle of law, that while exercising power of judicial review on administrative action and more particularly judgment of courts in appeal before the higher Court, providing of reasons can never be dispensed with. The doctrine of audi alteram partem has three basic essentials. Firstly, a person against whom an order is required to be passed or whose rights are likely to be affected adversely must be granted an opportunity of being heard. Secondly, the concerned authority should provide a fair and transparent procedure and* ***lastly, the authority concerned must apply its mind and dispose of the matter by a reasoned or speaking order****. This has been uniformly applied by courts in India and abroad.*"

23. The said reasoning has been reiterated by the Supreme Court in ***Manohar v. State of Maharashtra & Ors. AIR 2013 SC 681*** wherein it has been categorically observed that application of mind and recording of reasoned decision are the basic elements of natural justice. There can be no doubt that scrupulous adherence to these principles would be required while rejecting patent applications.

24. In the opinion of this Court, while rejecting an invention for lack of inventive step, the Controller has to consider three elements-

- the invention disclosed in the prior art,
- the invention disclosed in the application under consideration, and

- the manner in which subject invention would be obvious to a person skilled in the art.

25. Without a discussion on these three elements, arriving at a bare conclusion that the subject invention is lacking inventive step would not be permissible, unless it is a case where the same is absolutely clear. Section 2(1)(ja) of the Act defines `inventive step' as under:

> *(ja) "inventive step" means a feature of an invention that involves technical advance as compared to the existing knowledge or having economic significance or both and that makes the invention not obvious to a person skilled in the art.*

26. Thus, the Controller has to analyse as to what is the existing knowledge and how the person skilled in the art would move from the existing knowledge to the subject invention, captured in the application under consideration. Without such an analysis, the rejection of the patent application under Section 2(1)(ja) of the Act would be contrary to the provision itself. The remaining prior arts which are cited by ld. Counsel having not been considered in the impugned order, the Court does not wish to render any opinion in this regard.

27. In view of the above discussion, the impugned order dated 16th June, 2021 rejecting the patent application of the Appellant is set aside and the matter is remanded back to the IPO for a fresh consideration. As part of the said consideration, the IPO is permitted to consider the prior art D1 as also other prior arts and the ISR issued by the PCT office, which are now cited by the Respondent.

28. Let the same be considered and an order be passed within four months

from today. The observations made in the present order *qua* D1, would not be binding on the Controller.

29. The appeal is allowed and disposed of, along with all pending applications, in the above terms.

PRATHIBA M. SINGH
JUDGE

MARCH 31, 2022/*dk/sk*
(corrected & released on 04th April, 2022)

HIGH COURT OF DELHI
सत्यमेव जयते